Attenuator

The Best Wireless Solution!

Attenuator, SMA 2Watt 3dB 8GHz

P.N. : F01-B0803-05

Products feature

- Very Reliable Attenuation & V.S.W.R
- Stainless Steel material
- Wide broadband frequency application
- Bi-Directional 2 Watt rating

Electrical specification

Item	Specification
Frequency Range(GHz)	DC ~ 8 GHz
Impedance (Nominal)	50Ω
Attenuation	3±0.6dB
V.S.W.R (max)	1.20 : 1
Connector Type	SMA male – female
RoHS	Compliance

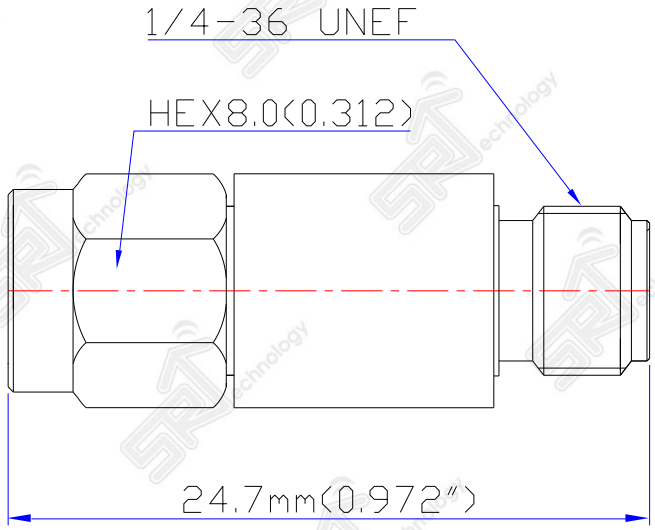

Material specification

Item	Specification
Body, Nut	Stainless Steel Passivated
Center contact (pin)	Brass, Beryllium Copper/ Gold plating
C-ring	Beryllium Copper/ Nickel Plating
Insulator	PTFE

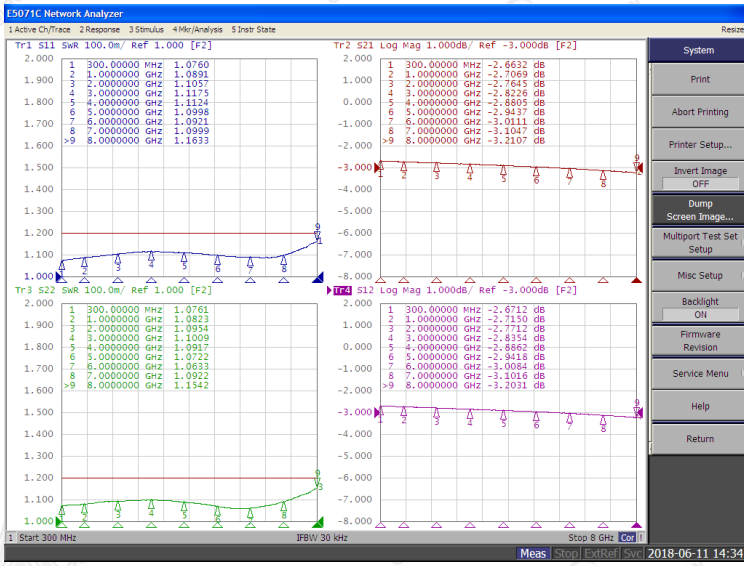

Tel : (+82)2- 866 -9003
Fax : (+82)2-6280-9333
www.srtechnology.com
sale@srtechnology.com

This above specification can be changed without prior notification.